This document contains Great Lakes Case & Cabinet/
Proprietary information
and may not be reproduced, disclosed, or utilized in
whole or in part without its prior written authorization.
Unpublished — All rights reserved under copyright

FILE LOCATION: F:\1-DWGS\1-ARCH\SOLID CONFIGS\C03\WEBZBOX\SK-3.dwg

REV	DESCRIPTION

FOR REFERENCE ONLY

FRONT VIEW

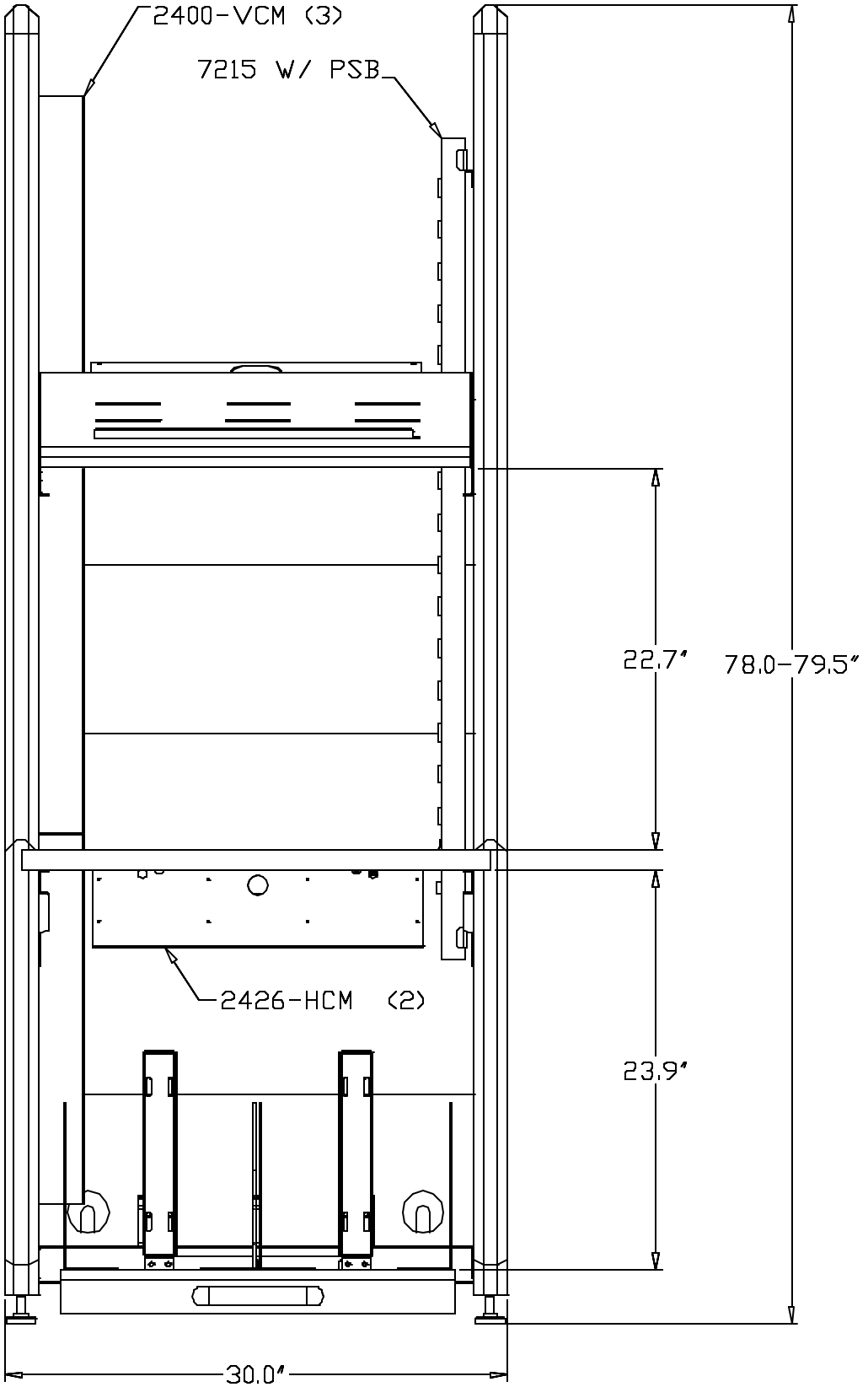

CUSTOMER#	QTY PER UNIT:	DRAWN BY: MIKE	REV. DATE: 6-23-00	Great Lakes Case & Cabinet Co. P.O. Box 551 / Edinboro, PA 16412 PHONE:(814)734-7366 FAX:(814)734-3867 EMAIL:glcc@greatlakescc.com
SCALE: N.T.S.	MATERIAL:	ISSUE DATE: 5-9-00	PART DESCRIPTION: ADVANTAGE 2000+ OPEN ARCHITECTURE WORK STATION	REV. 1 / DRAWING NO. GL2026-C03EX
TOLERANCES ON DIMENSIONS UNLESS OTHERWISE SPECIFIED DECIMAL .XXX ± .010 .XX ± .015 .X ± .020 ANGULAR ± 1/2° DIMENSIONS IN INCHES DO NOT SCALE		DESIGN CHG# SHEET: 3 OF 6		