REV	DESCRIPTION

FOR REFERENCE ONLY

TOP VIEW

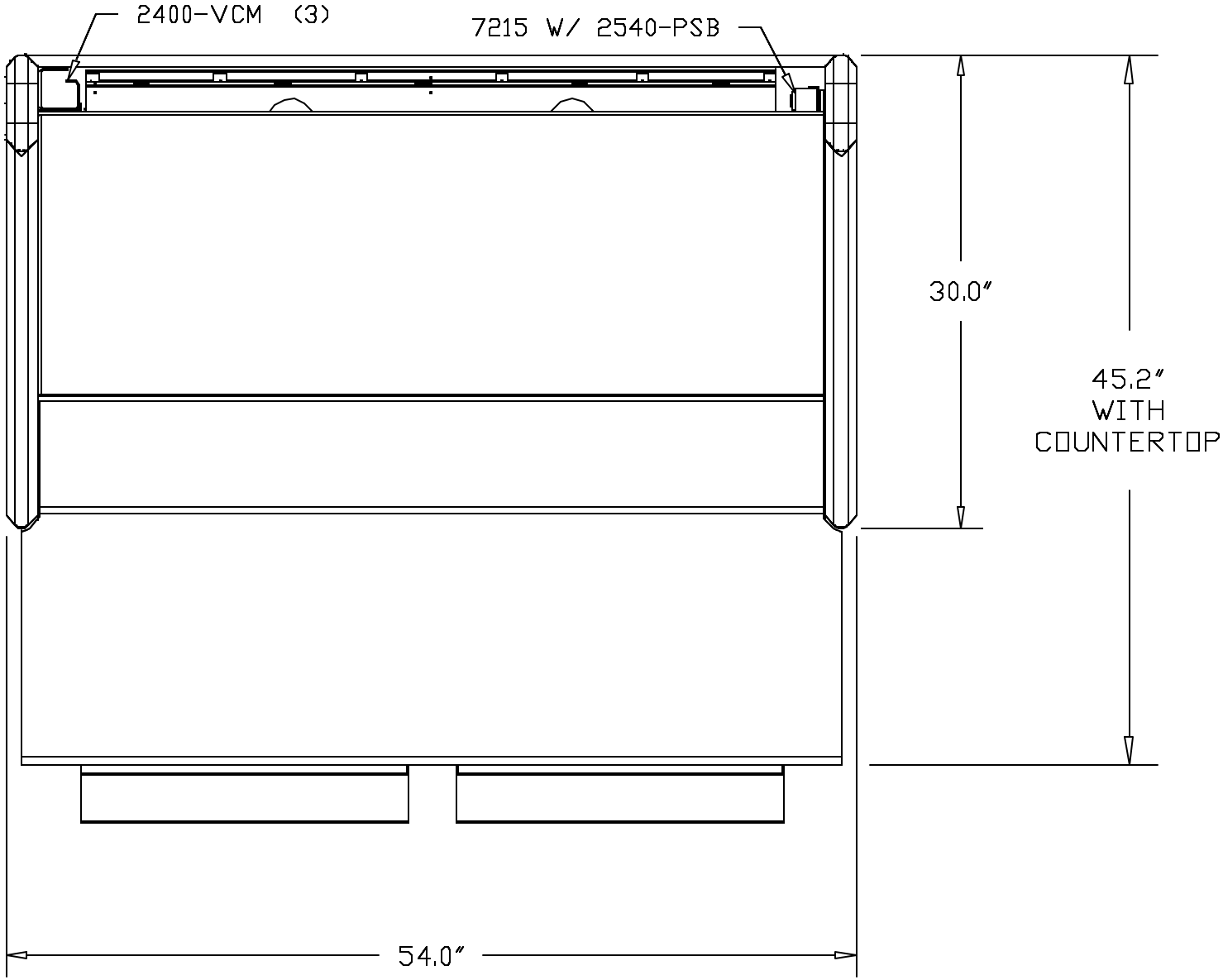

This document contains Great Lakes Case & Cabinet/ Proprietary Information and may not be reproduced, disclosed, or utilized in whole or in part without its prior written authorization. Unpublished — All rights reserved under copyright

DIMENSIONS IN INCHES — DO NOT SCALE

TOLERANCES ON DIMENSIONS UNLESS OTHERWISE SPECIFIED

DECIMAL .XXX ± .010 .XX ± .015 .X ± .020 ANGULAR ± 1/2°

FILE LOCATION: F:\1-DWGS\1-ARCH\SOLID CONFIGS\CO2\WEBSITEX\SK-5.dwg

DESIGN CHG#:	DRAWN BY: MIKE	REV. DATE: 6-1-00	
QTY PER UNIT:	ISSUE DATE: 4-17-00	PART DESCRIPTION: ADVANTAGE 2000+ OPEN ARCHITECTURE WORK STATION	
SCALE: N.T.S.	CUSTOMER#:		
MATERIAL:	SHEET: 5 OF 6		

Great Lakes Case & Cabinet Co.
P.O. Box 551 / Edinboro, PA 16412
PHONE(814) 734-7103 FAX(814) 734-2307 EMAIL glcc@greatlakescabinet.com

REV.	DRAWING NO.
1	GL2050-CO2EX